DP		2.5
Number of teeth	Z	82
Addendum modification	x	0
Pressure angle	a	20°
Accuracy grade	10-ISO 1328/97	

gear precision

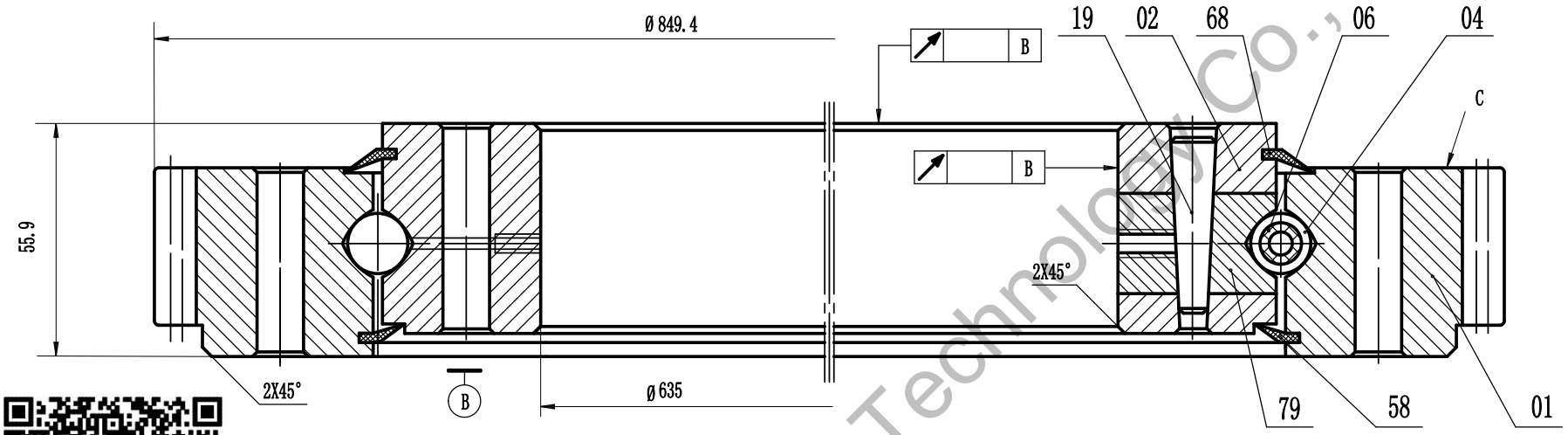

Remark:

1. Luoyang JCB Bearing Technology Co., Ltd is a technical Inc, specialize in designing and manufacturing slewing ring bearing, we can design and manufactur all kinds of slewing bearing according to client's requirement.
2. This drawing is reference for user, if you need formal drawing, please contact wth us sales@jcb-bearing.com, the official drawing will be submitted after order confirmation.

Contact information
Company Address : No.3 Lianmeng road, Luoyang, Henan, China.
Postal code : 471003
Phone : 86-379-68611678 Fax : 86-379-68611679
E-mail: sales@jcb-bearing.com
Reserved E-mail: sales@slewing-ring-bearings.com
Website: www.jcb-bearing.com
www.slewing-ring-bearings.com

No.	name	qty	material	unit weight	total (kg)
58	second seal	1	oil resistant rubber		
68	seal	1	oil resistant rubber		
79	plug	1	steel		
19	taper pin	1	steel		
06	cage		nylon		
04	steel ball		steel		
02	inner ring	1	steel		
01	outer ring	1	steel		

four-point contact ball slewing ring bearing

9E-1B20-0741-0999

weight(kg) 75.5

total page 8 page No. 1

Luoyang JCB Bearing Technology Co., Ltd

Luoyang JCB Bearing Technology Co., Ltd